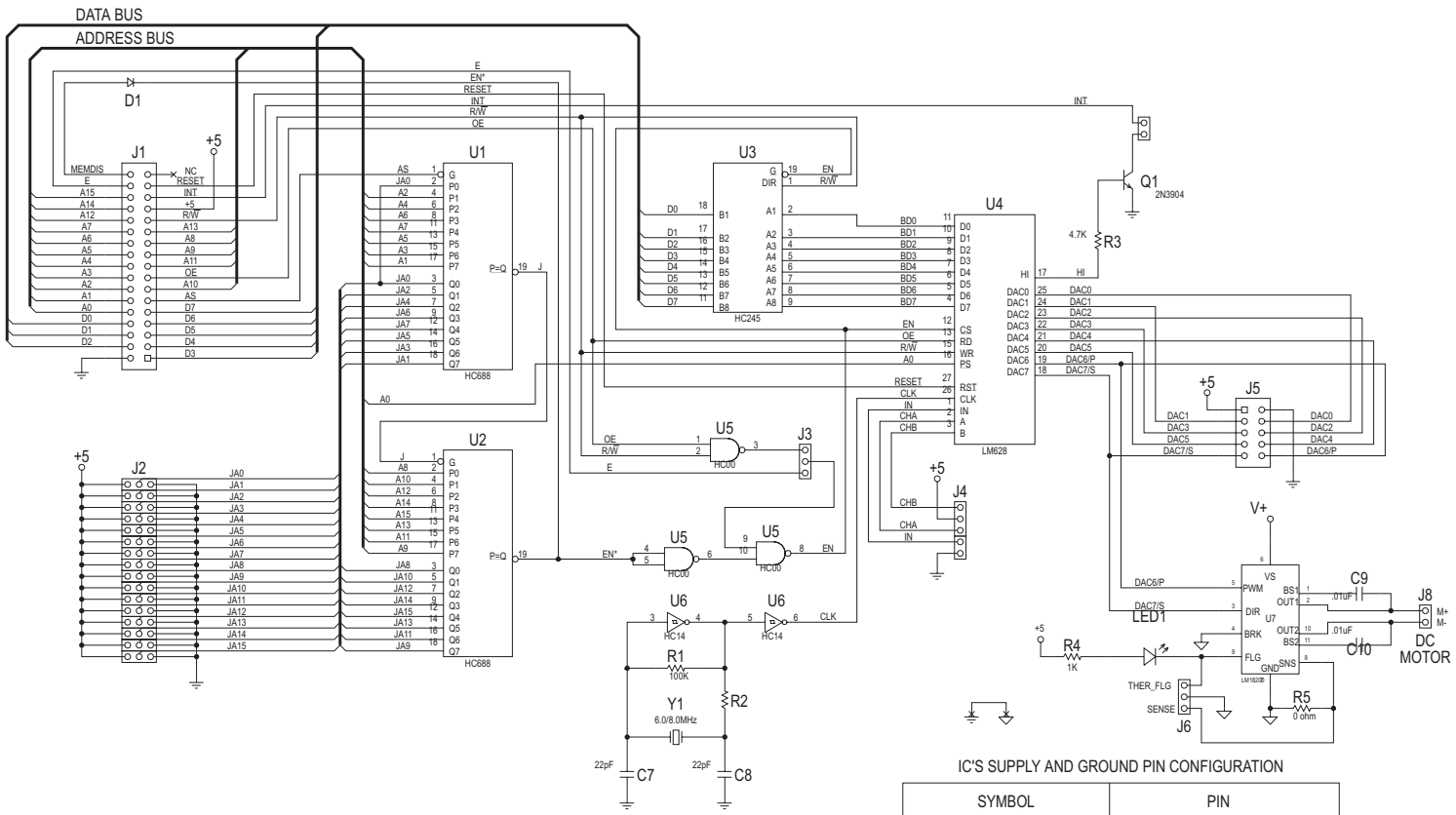

IC'S SUPPLY AND GROUND PIN CONFIGURATION

SYMBOL		PIN	
REFDES	DEVICE	SUPPLY	GROUND
U1,U2	74HC688	20	10
U3	74HC245	20	10
U4	LM629/628	28	14
U5	74HC00	14	7,12,13
U6	74HC04	14	7,1,13
U7	LMD18200	6	7

APPROVALS	DATE	
DRAWN CIBI-ARDY	022691	TITLE NMIS-7056 MOTOR CONTROLLER
CHECKED		SIZE D
FINISH		SCALE SHEET 1 OF 1

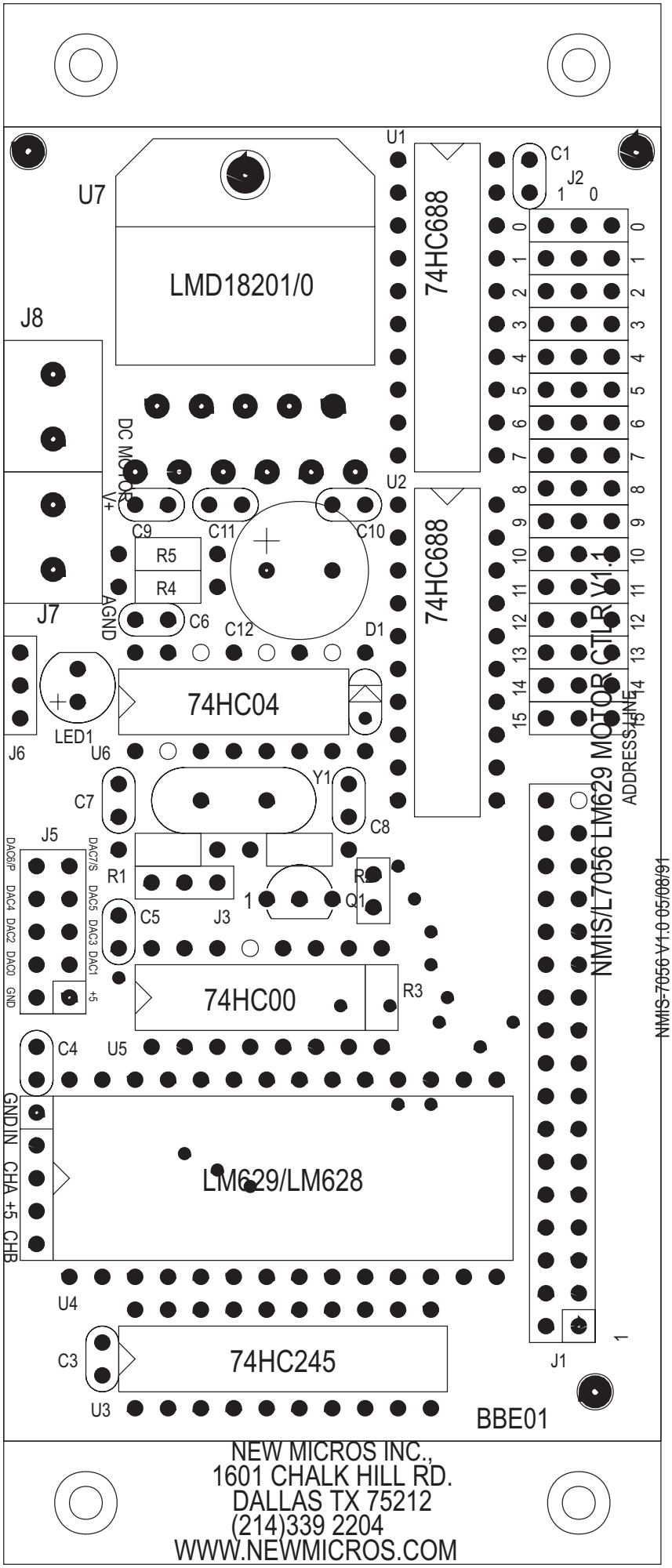

NEW MICROS INC.,
1601 CHALK HILL RD.
DALLAS TX 75212
(214)339 2204
WWW.NEWMICROS.COM